TOSHIBA

AIR CONDITIONER (MULTI-SPLIT TYPE)

Installation Manual

R32

INVERTER

Outdoor Unit

Model name:

RAS-2M10G3AVG-E
RAS-2M14G3AVG-E

Scan QR CODE to access installation and owner's manual on website.
https://www.toshiba-carrier.co.th/manuals/default.aspx

Manual are available in AR/BG/CZ/DA/DE/EL/EN/ES/ET/FI/FR/HR/HU/IT/LT/LV/NL/NO/PL/PT/RO/RU/SK/SL/SV/UK.

Installation Manual
Outdoor Unit

English

Contents

Please read this Installation Manual carefully before installing the Air Conditioner.
- This Manual describes the installation method of the outdoor unit.
- For installation of the indoor unit, refer to the Installation Manual attached to the indoor unit.

IMPORTANT NOTICE
For details on how to install the indoor units, refer to the installation manual accompanying the indoor units.

1 Installation / service tools

Changes in the product and components

In air conditioners using R410A, in order to prevent any other refrigerant from being accidentally charged, the service port diameter size of the outdoor unit service valve has been changed. (1/2 UNF 20 threads per inch)

- In order to increase the pressure resisting strength of the refrigerant piping, flare processing diameter and opposing flare nuts sizes have been changed. (for copper pipes with nominal dimensions 1/2 and 5/8)

Gauge manifold for R32	Phillips screwdriver	Pipe cutter	Flare tool for R32
Charge hose for R32	Level	Torque wrench	4 mm hexagonal wrench
Vacuum pump for R32	Scale	Wrench (or spanner)	
Gas leakage detector for R32	Utility knife	Reamer	

2 Specifications

			RAS-2M10G3AVG-E	RAS-2M14G3AVG -E
Operating conditions*1	Cooling operation		–10 to 46 °C	
	Dry operation		–10 to 46 °C	
	Heating operation		–20 to 24 °C	
Connecting pipe length	Minimum for 1 unit	(m)	2	2
	Maximum for 1 unit	(m)	15	20
	Maximum for total unit	(m)	20	30
	Height difference	(m)	20	10
	No additional refrigerant charge	(m)	20	30

The specifications for performance of this air conditioner differs depending on the combination of the indoor units which are operated.

*1 If the air conditioner is used in conditions other than the above, the safety protection functions may be activated.

* Example of indoor unit class: RAS-B10J2KVSG-E is abbreviated as “10”.

Indoor unit class		Standard connecting pipe diameter	
		RAS-2M10G3AVG-E	RAS-2M14G3AVG-E
Unit B	05 or 07 or 10 or 13	6.35, 9.52 mm	6.35, 9.52 mm
Unit A	05 or 07 or 10 or 13	6.35, 9.52 mm	6.35, 9.52 mm
Total	20 (RAS-2M10G3AVG-E)	-	
	26 (RAS-2M14G3AVG-E)		

3 Installation parts, accessories

Installation parts *Locally procured

Parts name	Specifications			Q’ty
Refrigerant piping*2	Indoor unit (abbreviation)	Liquid side (O.D.)	Gas side (O.D.)	1 ea.
	05, 07, 10, 13	6.35 mm	9.52 mm	
Putty, PVC tapes				1 ea.

*2 Refrigerant piping covered with insulating material (Polyethylene foam, 6 mm thick) When duct-type or cassette-type unit is to be installed, it shall be covered with thicker insulating material (Polyethylene foam, 10 mm thick)

Accessories

Installation manual	1		Rubber cap (Water-proof)	2		F-GAS label	1		Drain nipple	1	
Safety Manual	1										

4 Installation of outdoor unit

■ Installation Location

- A place which can bear the weight of the outdoor unit and does not cause an increase in noise level and vibration.
- A place where the operation noise and air discharge do not disturb neighbours.
- A place which is not exposed to strong wind.
- A place free of combustible gas.
- A place which does not block a passageway.
- A place where the drain water does not cause any problems.
- A place where there are no obstructions near its air intake or air discharge.

Installation in the following places may result in trouble:
- A place with a lot of machine oil.
- A place with saline-rich atmosphere such as a coastal area.
- A place with high level of sulfide gas.
- A place where high-frequency waves are likely to be generated, such as from audio equipment, welders, or medical equipment.

Do not install the unit in such places.

⚠ CAUTION

When the outdoor unit is installed in a place where the drain water might cause any problems, Seal the water leakage point tightly using a silicone adhesive or caulking compound.

■ Precautions for Installation

- When the outdoor unit is to be installed in an elevated position, be sure to secure its feet.
- If the outdoor unit is to be mounted on a wall, make sure the base plate supporting it is sturdy enough.
- The base plate should be designed and manufactured to maintain its strength over a long period of time, and sufficient consideration should be given to ensure that the outdoor unit will not fall.
- When the outdoor unit is installed in a place that is always exposed to strong wind such as a coastal area or on a high story of a building, secure the normal fan operation using a duct or a wind shield.
- Especially in windy areas, install the unit in such a way as to prevent the admission of wind.
- When the outdoor unit is to be mounted high on a wall, take particular care to ensure that parts do not fall, and that the installer is protected.
- When doing installation work at ground level, it is usual to make wiring and pipe connections to the indoor units first, and then to make connections to the outdoor units.
  However, if outdoor work is difficult, you can change the procedure.
  For example, by making adjustments to the wiring and piping lengths on the inside (rather than the outside).
- When using an air conditioner under low outside temperature conditions (Outside temp: -5 °C or lower) In COOL mode, prepare a duct or wind shield so that it is not affected by the wind.

Necessary Space for Installation

If you need to install the outdoor unit in a location where there are some obstructions or a wall, secure sufficient space as shown in the figure below. The cooling/heating effect may be reduced by 10%.

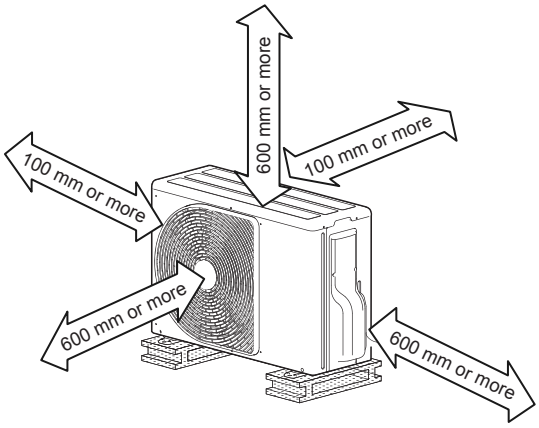

Draining Off the Water from the Outdoor Unit

Install 2 waterproof rubber caps and the drain nipple to drain off the water from the outdoor unit.
- Seal the knock-out holes and screw/thread areas tightly using a silicon adhesive or a caulking compound.
- Use a drain pan to apply a centralized drain.

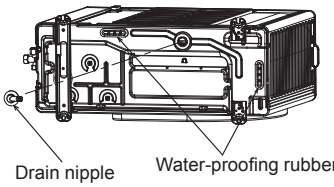

Installation in Regions with Snowfall and Cold Temperatures

Do not use waterproof rubber caps or a drain nipple.
- If you need to install the outdoor unit in a location where there is a possibility of the drain freezing, pay close attention so that the drain does not become frozen.
- To protect the outdoor unit from snow, install the outdoor unit on a holding frame, and attach a snow protection hood and plate.
- Keep the outdoor unit at least 500 mm above the snow accumulation line.

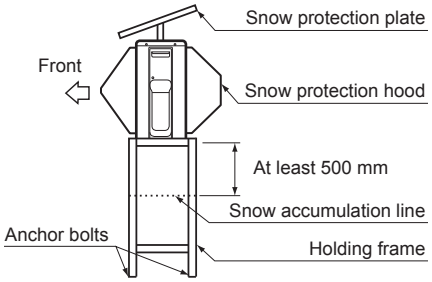

Fixing the Outdoor Unit

Fix the outdoor unit using attachment bolts.
- Use 8 mm or 10 mm anchor bolts and nuts.
- Do not allow the attachment bolts to protrude by more than 15 mm.
- Install the outdoor unit at ground level.
- Attach the vibration-proof rubber pads under the fixing legs.

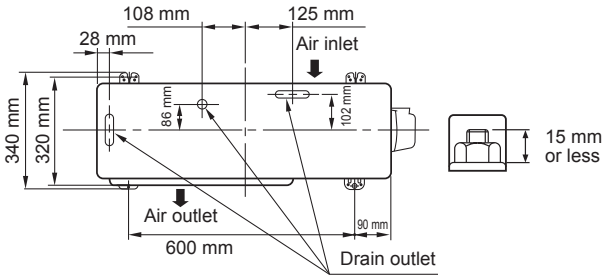

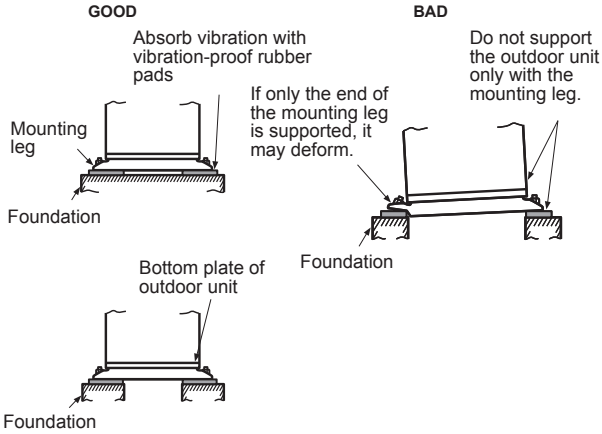

Support the bottom surface of the mounting leg that is in contact with and underneath the bottom plate of the outdoor unit.

5 Refrigerant piping

⚠ CAUTION

Install in rooms that are 5 m^3 or larger.
If a leak of refrigerant gas occurs inside the room, an oxygen deficiency may occur.

■ Detaching the Valve Cover

Remove the 3 screws.
- Pull the valve cover in the direction of the arrow and remove it.

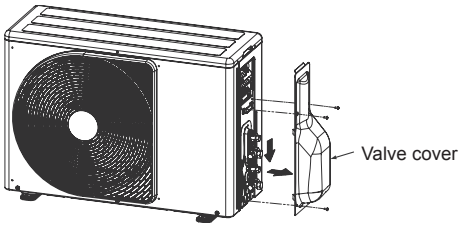

■ Refrigerant Piping Connection

Flaring

1. Cut the pipe with a pipe cutter.

2. Remove the burr inside of the pipe.
   When removing the burr, be careful so that chips do not fall into the pipe.
3. Remove the flare nuts attached to the outdoor/indoor unit, then insert them into each of the pipes.
4. Flare the pipes.
   See the following table for the projection margin (A) and flaring size (B).

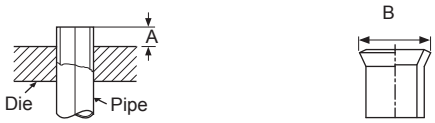

Pipe		A		B	Flare Nut		
Outside diameter	Thickness	Rigid (clutch type) R32 tool	Imperial (wing nut type) R32 tool		Width across flat	Tighten torque	
mm	mm	mm	mm	mm	mm	N•m	kgf•m
6.35	0.8	0 to 0.5	1.5 to 2.0	9.1	17	14 to 18	1.4 to 1.8
9.52	0.8	0 to 0.5	1.5 to 2.0	13.2	22	33 to 42	3.3 to 4.2

⚠ CAUTION

- Do not scratch the inner surface of the flared part when removing burrs.
- Flare processing under the condition of scratches on the inner surface of flare processing part will cause refrigerant gas leak.

Pipe connection

1. Make wire and pipe connections for each indoor unit separately.
2. Align the centres of the connecting pipes and tighten the flare nut as much as possible with your fingers, then tighten the nut using a torque wrench. Be sure to tighten the nut at the specified torque value.
   - If you use one outdoor unit for several indoor units of a different class, connect the largest one first A, then connect the rest in the order B to C.
   - Do not remove the flare nuts for any ports you are not going to use for connection.
   - Do not leave the flare nut unattached for a long period of time.
   - Use a different-diameter joint if the diameters of the connection port and connection piping are different.
   - Mount the different-diameter joint on the connection port of the outdoor unit.

⚠ CAUTION

- **KEEP IMPORTANT 7 POINTS FOR PIPING WORK.**
  (1) Take away dust and moisture (inside of the connecting pipes).
  (2) Tighten the connections (between pipes and unit).
  (3) Evacuate the air in the connecting pipes using a VACUUM PUMP.
  (4) Check gas leak (connected points).
  (5) Be sure to fully open the packed valves before operation.
  (6) Reusable mechanical connectors and flared joints are not allowed indoors. When mechanical connectors are reused indoors, sealing parts shall be renewed. When flared joints are reused indoors, the flare part shall be refabricated.
  (7) Don't operate air conditioner in case no refrigerant in the system.

■ Air Purge

From the sake of environmental protection, use a vacuum pump to extract the air during installation.
* Prepare a 4 mm hexagon wrench.

1. Connect a charge hose.
   - Make sure that the Handle Hi of the gauge manifold valve is closed fully.
   - Connect the port of the gauge manifold valve and the service port (Valve core (Setting Pin)) using the charge hose.

   NOTE
   If a control valve or charge valve is attached to the charge hose, leak of R32 refrigerant can be avoided.

2. Open the Handle Low of the gauge manifold valve fully, then operate the vacuum pump.
   - Loosen the flare nut of the at the gas end a little to make sure that air is taken in, then tighten the nut.
   - If you find air is not taken in, make sure that the charge hose is connected to the port(s) securely.
   - Perform extraction for about 15 or more minutes and make sure that the compound pressure gauge reading is –101 kPa (–76 cmHg).
   - If the compound pressure gauge reading is not –101 kPa (–76 cmHg), there is a possibility air is being taken in from the port(s).
   - Make sure that the charge hose is connected to the port(s) securely.
3. Close the Handle Low of the gauge manifold valve fully, then stop operating the vacuum pump.
   - Leave the gauge and pump as they are for 1 or 2 minutes, then make sure that the compound pressure gauge reading stays at –101 kPa (–76 cmHg).
   - You need not add refrigerant.

4. Disconnect the charge hose from the service port, then open the valve stem fully using a 4 mm hexagon wrench.

Hexagon wrench is required.

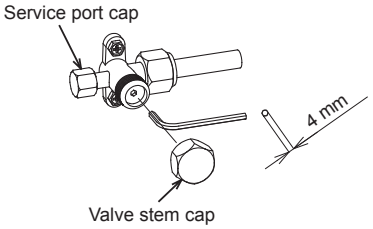

5. Tighten the service valve stem cap and service port cap securely.

⚠ CAUTION

Use a torque wrench and tighten the nut at the specified torque value.

6. Tighten all the caps on the valves securely, then perform a gas leak inspection.

Service valve		Tighten torque			
		Valve stem cap		Service port cap	
Type	mm	N•m	kgf•m	N•m	kgf•m
Liquid side	6.35	14 to 18	1.4 to 1.8	-	-
Gas side	9.52	14 to 18	1.4 to 1.8	14 to 18	1.4 to 1.8

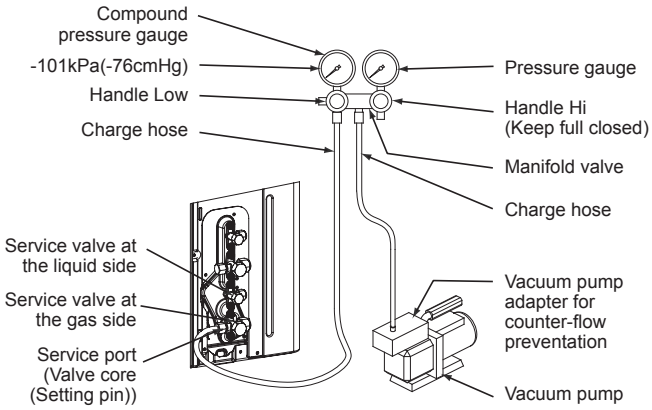

■ Insulation of the Refrigerant Pipes

- Insulate the refrigerant pipes for liquid and gas separately.

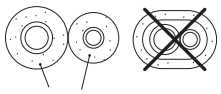

■ Gas Leak Inspection

- Perform a gas leak inspection for the flare nut connections, valve stem connection, and service port cap without fail.
- Use a leak detector exclusively manufactured for R32.

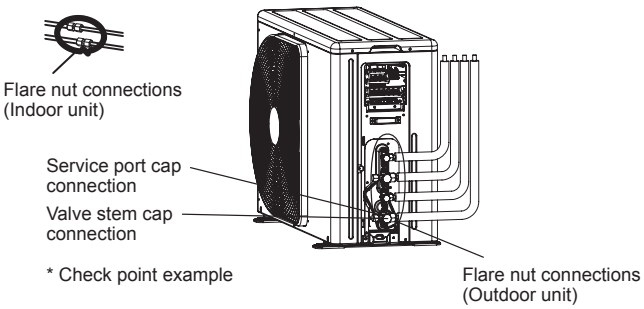

■ Performing Additional Installation of an Indoor Unit

1. Collect refrigerant from the outdoor unit.
2. Turn off the circuit breaker.
3. Perform additional installation referring to the procedure from “Refrigerant Piping Connection” on the previous page.

6 Electrical work

⚠ WARNING

- Be sure to comply with local regulations/ codes when running the wire from the outdoor unit to the indoor unit. (Size of wire and wiring method etc.)
- A lack of electrical capacitance or incorrect wiring may cause an electric shock or a fire.
- To make sure that the wiring connection are secure, use designated cables.
- Fix the cables securely so that no external force applied to the cables may effect the terminals.
- If wiring connections are incomplete or cables are not fixed securely, it may cause a fire.
- Be sure to ground the outdoor unit.
- Incomplete grounding may lead to an electric shock.

⚠ CAUTION

- Incorrect/incomplete wiring will cause electrical fires or smoke.
- Prepare the power source for exclusive use with the air conditioner.
- This product can be connected to the main power.
  Fixed wire connections:
  A switch that disconnects all poles and has a contact separation of at least 3 mm must be incorporated into the fixed wiring.

■ Wire Connection

- The dash lines show on-site wiring.

For indoor unit RAS-M series.

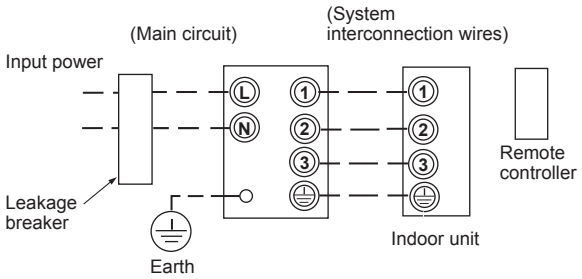

For indoor unit RAS-B series.

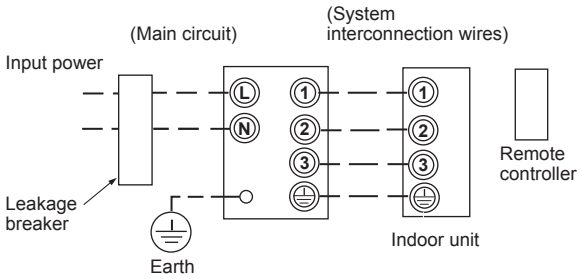

- Connect the indoor/outdoor connecting cables to the identical terminal numbers on the terminal block of each unit.
- Incorrect connection may cause a failure.

Model	RAS-2M10G3AVG-E	RAS-2M14G3AVG-E
Power supply	1ph, 50Hz, 220-240V	
Maximum running current	9.50A	10.50A
Circuit breaker rating	15A	
Power cord	H07RN-F or 60245 IEC 66 3-core 1.5 mm²	
Connecting cable	H07RN-F or 60245 IEC 66 4-core 0.75 mm²	

1. Remove the valve cover screws.
2. Pull the valve cover in the direction of arrow, and remove it.
3. Remove the cord clamp.

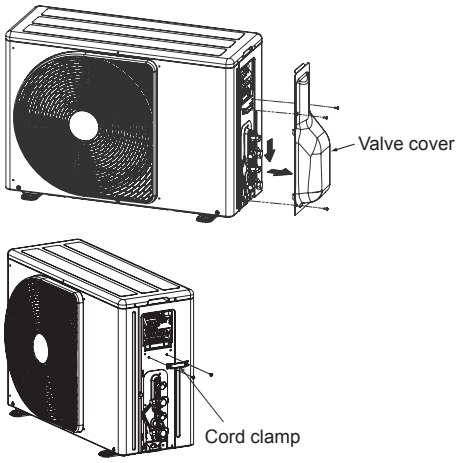

4. Connect the wires for the power source and each indoor unit.
   - Connect the connecting cable to the terminal as identified by the matching numbers on the terminal block of the indoor and the outdoor unit.
5. Fix the wiring connections for the power source and each indoor unit securely using a cord clamp.
6. Attach the terminal cover and the valve cover.

Stripping Length of connecting cable for outdoor unit

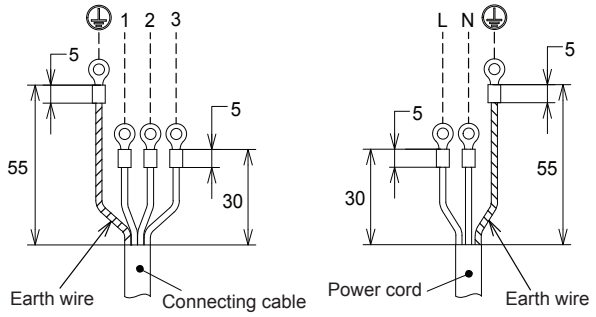

(Unit : mm)

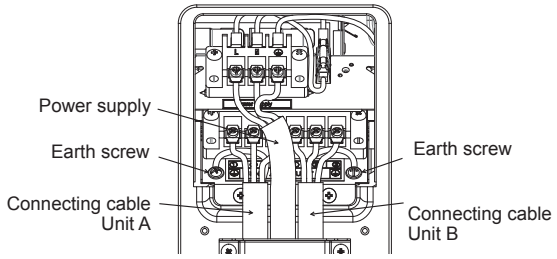

7 Grounding

This air conditioner must be grounded without fail.

- Grounding is necessary not only to safeguard against the possibility of receiving an electric shock but also to absorb both static, which is generated by high frequencies and held in the surface of the outdoor unit, and noise since the air conditioner incorporates a frequency conversion device (called an inverter) in the outdoor unit.
- If the air conditioner is not grounded, users may receive an electric shock if they touch the surface of the outdoor unit and that unit is charged with static.

8 Test run

■ Wiring/Piping Check

⚠ CAUTION

Electric current is applied on the control board. Beware of electric shock.

1. Remove the cabinet (up) screws.
2. Pull the cabinet (up) in the direction of arrow, and remove it.

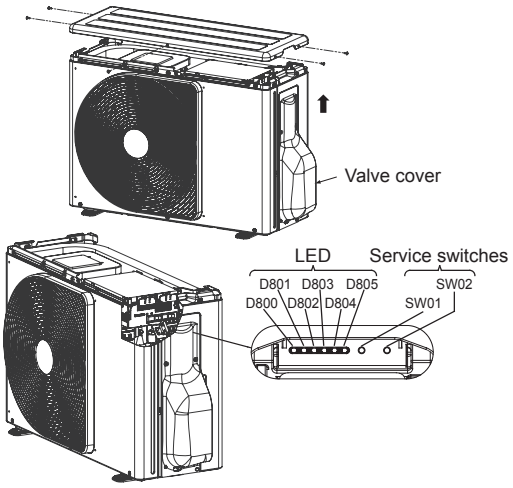

3. Turn on the circuit breaker to supply electricity.
   In the initial LED display status, D805 is lighted as below.

   ○ : ON, ● : OFF, ◎ : Rapid Flashing (5 times/sec.),
   ◇ : Slow Flashing (1 time/sec.)

D800	D801	D802	D803	D804	D805
●	●	●	●	●	○

   Start running all the indoor units connected to the outdoor unit in the cooling mode.
   (The indoor unit in the room that doesn't operate the cooling mode cannot be checked.)

4. After 5 minutes, hold down SW01 for at least 5 seconds, and check that D800 is lighted and D804 light is flashing (1 time/sec.).

D800	D801	D802	D803	D804	D805
○	●	●	●	◇	●

5. Press the SW01 4 times until the LED is displayed as below.

D800	D801	D802	D803	D804	D805
●	●	○	●	◎	●

6. Press SW02 for 1 time. Then D805 light is flashing (5 times/sec.).

D800	D801	D802	D803	D804	D805
●	●	○	●	◎	◎

7. Hold down SW02 for at least 5 seconds. Then the wiring/piping check starts automatically. (The LED display is lighted for a moment.)

D800	D801	D802	D803	D804	D805
●	●	○	●	◇	○

   - If no problems are detected, the checking operation returns to the normal operation automatically. The LED is displayed as below.

D800	D801	D802	D803	D804	D805
●	●	●	●	●	○

8. The below is displayed when the error is detected.
   (* Repetition of 3 sec ON / 0.5 sec OFF)

D800*	D801	D802	D803	D804	D805
○*	○*	○*	○*	○*	○

   Press the SW01 3 times until the LED is displayed as below, to check the room judged as error.

D800	D801	D802	D803	D804	D805
●	○	●	●	●	◎

   Incorrect wiring/piping can be checked by pressing SW02. The LED is displayed as below. Turn off the circuit breaker, then check wiring/piping again.

Check result						
D800	**D801**	**D802**	**D803**	**D804**	**D805**	**Description**
●	●	●	●	●	◇	Normal operation (no error)
○	●	●	●	●	◇	Trouble in unit A
●	○	●	●	●	◇	Trouble in unit B
○	○	●	●	●	◇	Trouble in unit A and B

   - The D800 LED represents unit A.
   - The D801 LED represents unit B.

9. When you want to start over the operation of the SW01 and SW02, press the SW01 and the SW02 at the same time for 5 sec. (The procedure will set back to step 3.) However, do not execute the operation during the check. If by any chance the check is stopped by the operation, start over the check after turning off the power once.

10. Notes
    - It sometimes takes about 30 minutes maximum for the check.
    - During the check, the compressor and the fan of the outdoor/indoor unit repeat ON/OFF.
    - You cannot check wiring/piping when the external temperature is 5ºC or less. Also, there is a possibility to misjudge if the indoor temperature becomes too low by cooling operation. In that case, execute the cooling operation for per room and check if the connection is normal.

■ Gas Leak Inspection

Refer to the “■ Gas Leak Inspection” on page 5.

■ Test run

1. If you perform the test run in summer, start running in the cooling mode first to decrease the temperature of the room, then run in the heating mode.
   (Heating mode: Set the temperature to 30°C.)
   - If you perform the test run in winter, start running in the heating mode first to increase the temperature of the room, then run in the cooling mode.
     (Cooling mode: Set the temperature to 17°C.)
2. For the test run, be sure to satisfy the following conditions below:
   - Perform the test run for each indoor unit respectively.
   - Perform the test run for about 10 minutes in both the cooling mode and the heating mode.
   - You can perform the test run in the cooling/heating mode by utilizing the thermo sensor of the indoor unit.
     Cooling mode: Warm the thermo sensor using an appliance such as a hair dryer.
     Heating mode: Put a cold towel on the thermo sensor.

■ Instructions for the Customers

- Explain to the customers the proper operation procedure and let them operate the air conditioner along with the supplied instruction manual.
- When multiple indoor units are connected to the outdoor unit, the cooling mode and the heating mode are not available at the same time.
  When multiple indoor units are running at the same time, the operation mode of the unit which starts running first is applied to the other units.
- When you start running the indoor unit or change the operation mode, the unit starts running after 3 minutes. This is due to the protection function of the unit, not a malfunction.
- When the external temperature becomes low, the pre-heating of the compressor starts to protect it. Keep the circuit breaker on for use.
  The electricity consumption during pre-heating is about 30 W.
  If the circuit breaker is turned off, the indoor unit may not start running for about 10 minutes or more.
- Electronic expansion valves are used for the outdoor unit.
  When you turn on the power, the outdoor unit starts clattering every 1 or 2 months. This clattering is not a malfunction, but occurs when the unit is returning to the default setting for optimised control.
- While an indoor unit is running in the heating mode, the outdoor unit supplies refrigerant to the other indoor units which are not running. Therefore, noise may come from the other indoor units or the exterior of them may become warm.

9 Pump-down Operation

■ Pump-down Operation (Recovering refrigerant)

⚠ CAUTION

Since the forcible running for collecting refrigerant stops automatically after 10 minutes, finish collecting refrigerant within 10 minutes.

Electric current is applied on the control board. Beware of electric shock.

- **The following must be certainly done during pump down.**
  - **Do not incorporate air into the refrigeration cycle.**
  - **Close the service valves. Stop the compressor and remove the refrigerant pipe.**
    If the refrigerant pipe is removed when the compressor is operating and service valves are opened, the refrigerant cycle will inhale unwanted matter such as air and the pressure in the cycle becomes abnormally elevated. It may cause a burst or injury.

1. Remove the valve cover screws.
2. Pull the valve cover in the direction of arrow, and remove it.

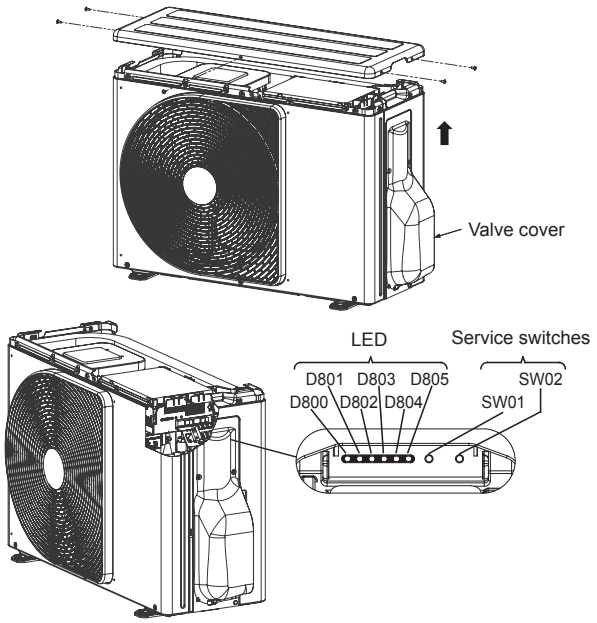

3. Turn on the circuit breaker to supply electricity.
   In the initial LED display status, D805 is lighted as below.
   ○ : ON, ● : OFF, ◎ : Rapid Flashing (5 times/sec.), ◇ : Slow Flashing (1 time/sec.)

D800	D801	D802	D803	D804	D805
●	●	●	●	●	○

Start running all the indoor units connected to the outdoor unit in the cooling mode.
The checking procedure cannot be completed if the cooling mode is not operated in every indoor units.

4. Hold down SW01 for at least 5 seconds, and check that D800 is lighted and D804 light is flashing (1 time/sec.).

D800	D801	D802	D803	D804	D805
○	●	●	●	◇	●

5. Press SW01 for 1 time. Then D804 light is flashing (5 times/sec.).

D800	D801	D802	D803	D804	D805
○	●	●	●	◎	●

6. Press SW02 for 1 time. Then D805 light is flashing (5 time/sec.).

D800	D801	D802	D803	D804	D805
○	●	●	●	◎	◎

7. Hold down SW02 for at least 5 seconds. Then outdoor unit start cooling mode.
   (The display is kept during the refrigerants collection operation.)

D800	D801	D802	D803	D804	D805
○	●	●	●	◇	○

8. Close the valve stem of the service valve at the liquid end.
9. Make sure that the compound pressure gauge reading is -101 kPa (-76 cmHg)
10. Close the valve stem of the service valve at the gas end.
11. The refrigerants collection operation is finished in maximum 10 minutes. After the collection is finished, promptly stop the operation of all the indoor unit.
    (There are cases that the compressor restarts.)
12. When you want to start over the operation of the SW01 and SW02, press the SW01 and SW02 at the same time for 5 sec. (It back to the initial condition of 3.)
    However, do not execute the operation during the refrigerants collection. If by any chance the collection is stopped by the operation, start over the refrigerants collection operation.

10 Troubleshooting

■ Troubleshooting

You can perform fault diagnosis of the outdoor unit with the LEDs on the P.C. board of the outdoor unit in addition to using the check codes displayed on the remote controller of the indoor unit.
Use the LEDs and check codes for various checks. Details of the check codes displayed on the remote controller of the indoor unit are described in the Installation Manual of the indoor unit.

LED displays and check codes

○ : ON (○* : 3 sec ON/0.5 sec OFF) ● :OFF

Display						Indoor check code	Description
D800 (YL)	D801 (YL)	D802 (YL)	D803 (YL)	D804 (YL)	D805 (GN)		
●	●	●	●	●	○	-	Normal operation (no error)
○*	●	●	●	●		1C	Compressor case thermostat error
●	○*	●	●	●		21	High pressure switch error
○*	○*	●	●	●		1C	Compressor system error
●	●	○*	●	●		1D	Compressor lock
○*	●	○*	●	●		1F	Compressor breakdown
●	○*	○*	●	●		14	Driving element short circuit
○*	○*	○*	●	●		16	Position detection circuit error
●	●	●	○*	●		17	Current detection circuit error
○*	●	●	○*	●		1C	Communication error between MCU
●	○*	●	○*	●		1A	Fan system error
○*	○*	●	○*	●		1E	Discharge temperature error
●	●	○*	○*	●		19	Discharge temperature sensor (TD) error
○*	●	○*	○*	●		1B	Outdoor air temperature sensor (TO) error
●	○*	○*	○*	●		18	Suction temperature sensor (TS) error
○*	○*	○*	○*	●		18	Heat exchanger temperature sensor (TE) error
●	●	●	●	○*		1C	Gas pipe (unit A) temperature sensor (TGa) error
○*	●	●	●	○*		1C	Gas pipe (unit B) temperature sensor (TGb) error
●	○*	●	●	○*		1C	Gas pipe (unit C) temperature sensor (TGc) error
○*	●	○*	●	○*		-	PMV error (SH≥20)
●	○*	○*	●	○*		-	PMV error (SH≤–8)
●	●	●	○*	○*		20	PMV leakage error (unit A)
○*	●	●	○*	○*		20	PMV leakage error (unit B)
●	○*	●	○*	○*		20	PMV leakage error (unit C)
○*	●	○*	○*	○*		-	Miswiring (mispiping) check error

11 Appendix

Work instructions

The existing R22 and R410A piping can be reused for our digital inverter R32 product installations.

⚠ WARNING

Confirming the existence of scratches or dents on the existing pipes and confirming the reliability of the pipe strength are conventionally referred to the local site.
If the specified conditions can be cleared, it is possible to update existing R22 and R410A pipes to those for R32 models.

Basic conditions needed to reuse existing pipes

Check and observe the presence of three conditions in the refrigerant piping works.

1. **Dry** (There is no moisture inside of the pipes.)
2. **Clean** (There is no dust inside of the pipes.)
3. **Tight** (There are no refrigerant leaks.)

Restrictions for use of existing pipes

In the following cases, the existing pipes should not be reused as they are. Clean the existing pipes or exchange them with new pipes.

1. When a scratch or dent is heavy, be sure to use new pipes for the refrigerant piping works.
2. When the existing pipe thickness is thinner than the specified "Pipe diameter and thickness," be sure to use new pipes for the refrigerant piping works.
   - The operating pressure of R32 is high (1.6 times that of R22). If there is a scratch or dent on the pipe or a thinner pipe is used, the pressure strength may be inadequate, which may cause the pipe to break in the worst case.

* **Pipe diameter and thickness (mm)**

Pipe outer diameter		Ø6.4	Ø9.5	Ø12.7
Thickness	R32, R410A	0.8	0.8	0.8
	R22			

3. When the outdoor unit was left with the pipes disconnected, or the gas leaked from the pipes and the pipes were not repaired and refilled.
   - There is the possibility of rain water or air, including moisture, entering the pipe.
4. When refrigerant cannot be recovered using a refrigerant recovery unit.
   - There is the possibility that a large quantity of dirty oil or moisture remains inside the pipes.
5. When a commercially available dryer is attached to the existing pipes.
   - There is the possibility that copper green rust has been generated.
6. When the existing air conditioner is removed after refrigerant has been recovered.
   Check if the oil is judged to be clearly different from normal oil.
   - The refrigerator oil is copper rust green in color: There is the possibility that moisture has mixed with the oil and rust has been generated inside the pipe.
   - There is discolored oil, a large quantity of residue, or a bad smell.
   - A large quantity of shiny metal dust or other wear residue can be seen in the refrigerant oil.
7. When the air conditioner has a history of the compressor failing and being replaced.
   - When discolored oil, a large quantity of residue, shiny metal dust, or other wear residue or mixture of foreign matter is observed, trouble will occur.
8. When temporary installation and removal of the air conditioner are repeated such as when leased etc.
9. If the type of refrigerator oil of the existing air conditioner is other than the following oil (Mineral oil), Suniso, Freol-S, MS (Synthetic oil), alkyl benzene (HAB, Barrel-freeze), ester series, PVE only of ether series.
   - The winding-insulation of the compressor may deteriorate.
10. When total pipe length is longer than the maximum length for total unit, specified in clause 3, be sure to use new pipes for the refrigerant piping works.

NOTE

The above descriptions are results have been confirmed by our company and represent our views on our air conditioners, but do not guarantee the use of the existing pipes of air conditioners that have adopted R32 in other companies.

Curing of pipes

When removing and opening the indoor or outdoor unit for a long time, cure the pipes as follows:

- Otherwise rust may be generated when moisture or foreign matter due to condensation enters the pipes.
- The rust cannot be removed by cleaning, and new pipes are necessary.

Placement location	Term	Curing manner
Outdoors	1 month or more	Pinching
	Less than 1 month	Pinching or taping
Indoors	Every time	

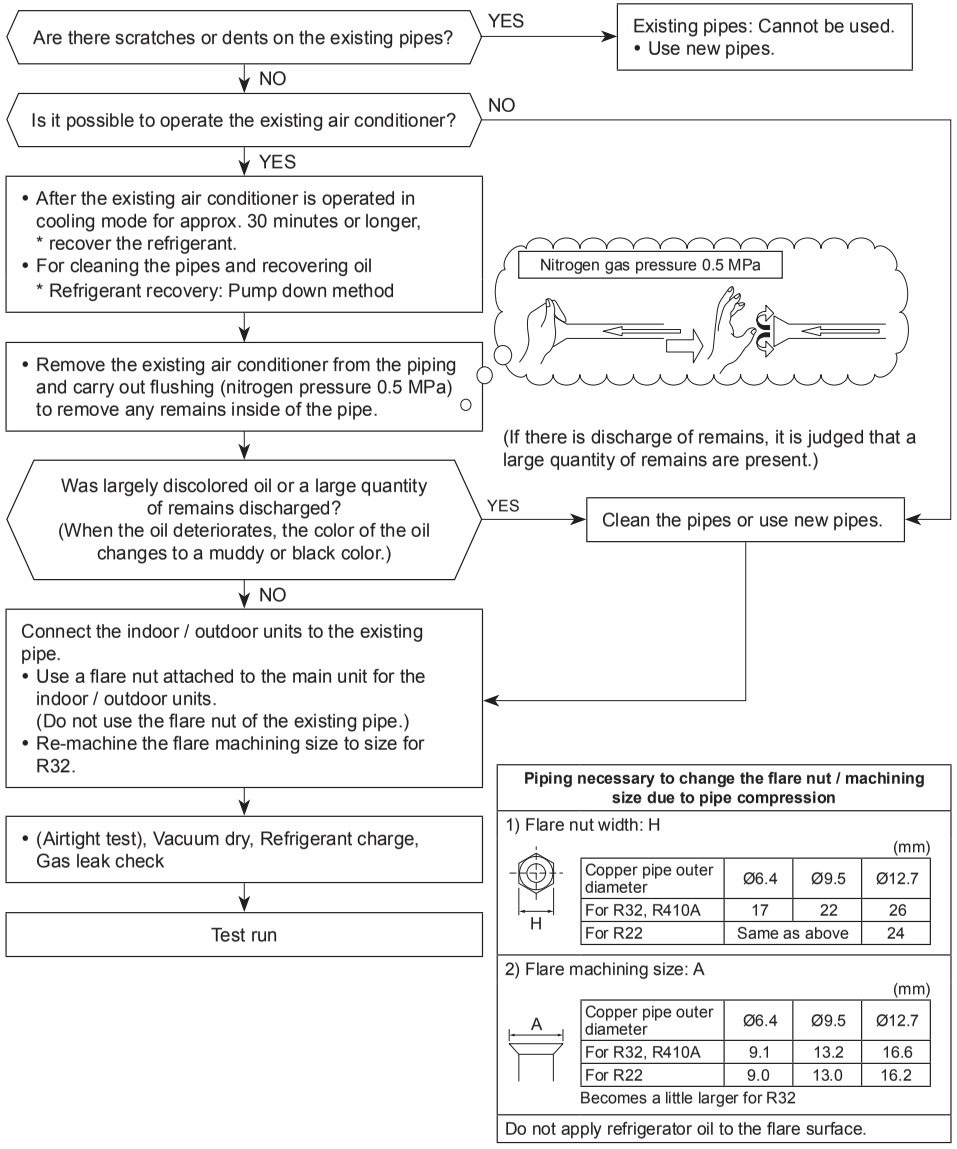

Piping necessary to change the flare nut / machining size due to pipe compression

1) Flare nut width: H

(mm)

Copper pipe outer diameter	Ø6.4	Ø9.5	Ø12.7
For R32, R410A	17	22	26
For R22	Same as above		24

2) Flare machining size: A

(mm)

Copper pipe outer diameter	Ø6.4	Ø9.5	Ø12.7
For R32, R410A	9.1	13.2	16.6
For R22	9.0	13.0	16.2

Becomes a little larger for R32

Do not apply refrigerator oil to the flare surface.

Toshiba Carrier (Thailand) Co., Ltd.

144 / 9 Moo 5, Bangkadi Industrial Park, Tivanon Road, Tambol Bangkadi, Amphur Muang, Pathumthani 12000, Thailand

1116491002A